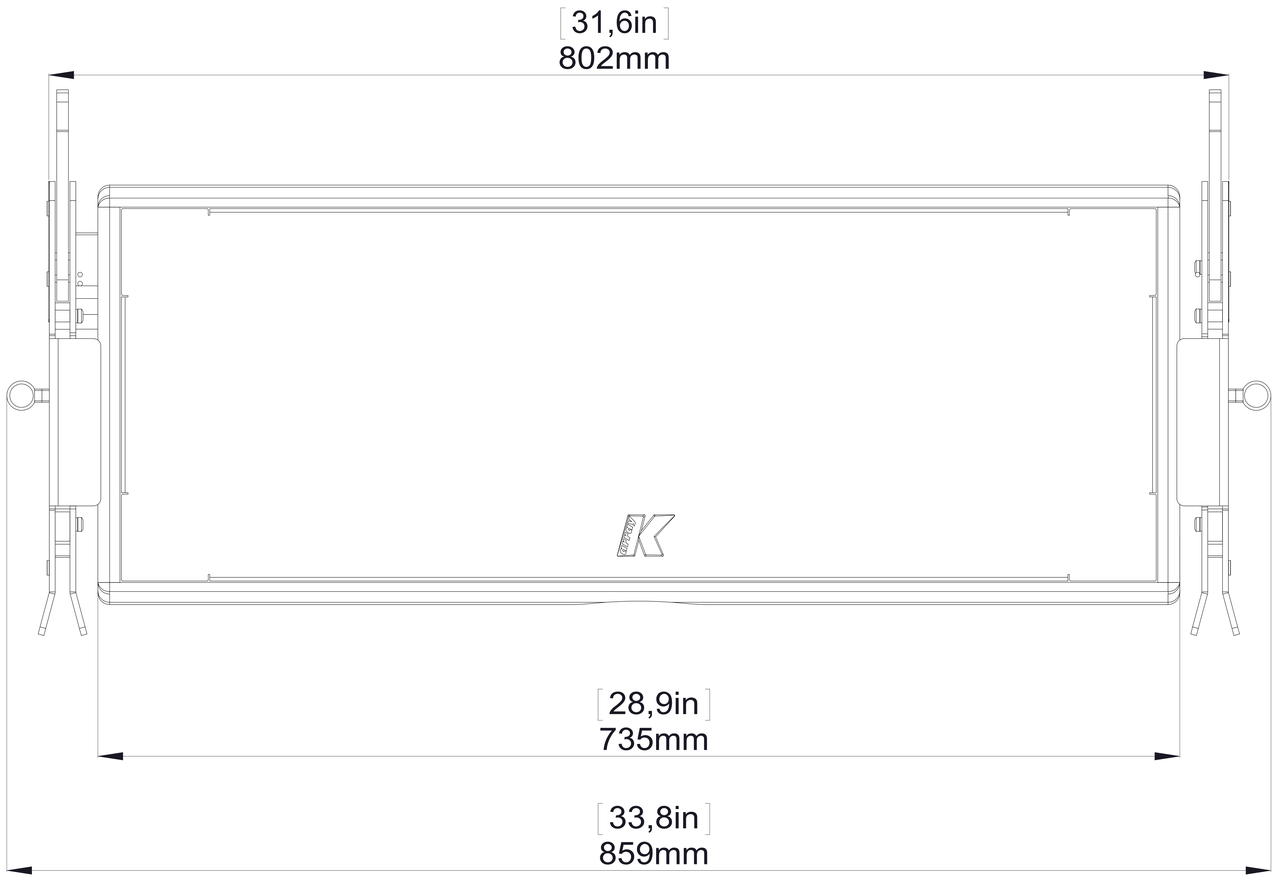
31,6in
802mm
28,9in
735mm
33,8in
859mm

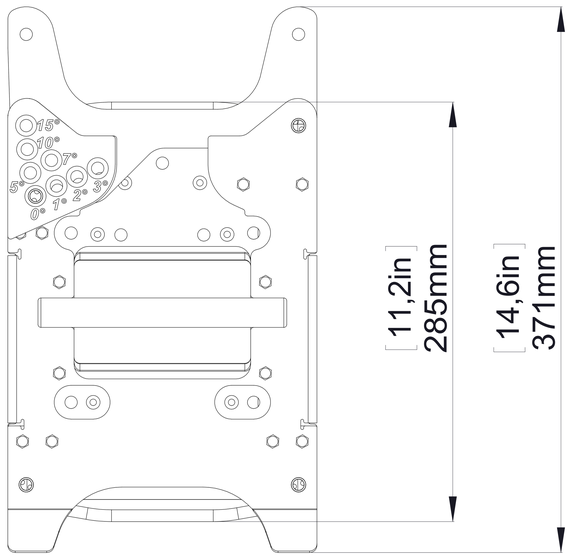
11,2in
285mm
14,6in
371mm

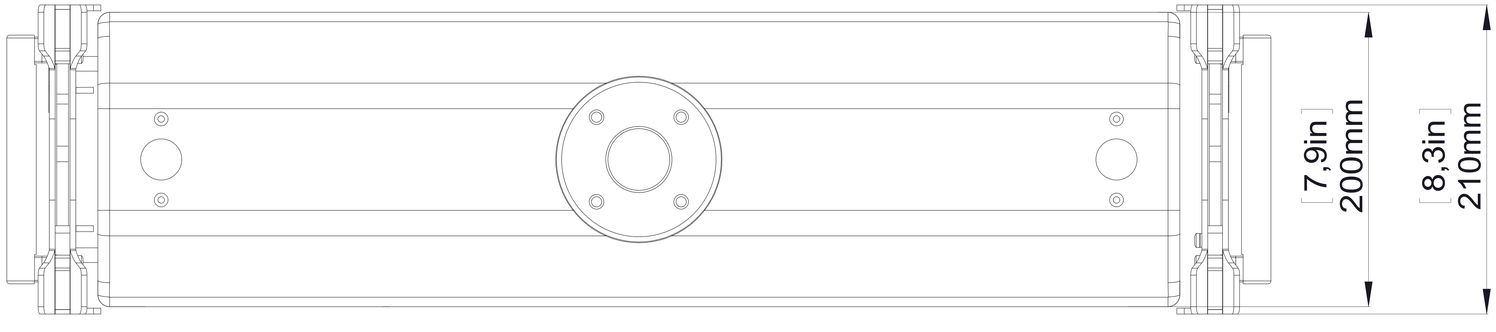
7,9in
200mm
8,3in
210mm